User Manual

Active Line Array Speaker

SR-D200-EB



Thank you for purchasing this TOA product.
Please read the instructions carefully to ensure long-term, and trouble-free operation of the unit.

TOA Electronics Europe GmbH

TABLE OF CONTENTS

1. SAFETY PRECAUTIONS 3
2. GENERAL DESCRIPTION 5
2.1. Overview 5
2.2. Features 5
2.3. Interface Description 6
2.4. Accessories 7
2.4.1 Serial number 26I and earlier 7
2.4.2 Serial number 26J and later 7
2.5. PC requirements 7
3. INSTALLATION: 8
3.1.1 Type 1 8
3.1.2 Type 2 10
3.2. Connection for Setting Software 12
3.3. Setting Software Description 13
3.3.1 Volume Control Interface 13
3.3.2 Noise Gate Interface 14
3.3.3 Compressor Interface 15
3.3.4 Delay Interface 15
3.3.5 Output Interface 16
4. Reference dimensions 17
5. APPENDIX 18
5.1. Specifications 18

1. SAFETY PRECAUTIONS

- **Before installation or use, carefully read all instructions in this section to ensure correct and safe operation**
- **Follow all precautionary instructions in this section, as they contain important warnings and cautions regarding safety**
- **After reading, keep this manual handy for future reference.**

Safety Symbol and Message Conventions

Safety symbols and messages described below are used in this manual to prevent bodily injury and property damage which could result from improper handling. Read this manual before operating the product and familiarize yourself with the safety symbols and messages to fully understand the potential safety hazards.

WARNING

Indicates a potentially hazardous situation which, if mishandled, may result in death or serious personal injury.

⚠ WARNING	Indicates a potentially hazardous situation which, if mishandled, could result in death or serious personal injury.

When installing the unit

- Do not expose the unit to rain or any environment where it may be splashed by liquids, as this may result in fire or electric shock.
- Use the unit only with the voltage specified on the label. Using a voltage higher than specified may lead to fire or electric shock.
- Do not cut, kink, damage, or modify the power supply cord. Avoid using the cord near heat sources and never place heavy objects, including the unit, on the cord, as this may cause fire or electric shock.
- Install the unit only in a location that can structurally support its weight and that of the mounting bracket. Otherwise, it may fall, causing injury or property damage.
- As the unit is designed for indoor use, do not install outdoors. Outdoor installation may lead to aging of parts, causing them to fall off and result in injury. Exposure to rain also poses a risk of electric shock.
- Due to the unit's size and weight, ensure that at least two people are present for installation. Failure to do so may result in injury.
- Do not use mounting methods other than those specified. Excessive force may be applied to the unit, causing it to fall and possibly cause injury.
- Use nuts and bolts appropriate for the structure and material of the wall. Otherwise, the speaker may fall, causing damage or injury.
- Tighten all nuts and bolts securely. Ensure no loose joints remain to prevent accidents and injury.
- Use the specified mounting bracket only, as failing to do so may cause the unit or its components to fall, resulting in injury.)
- Do not mount the unit in locations subject to constant vibration. Excessive vibration may damage the bracket and cause the unit to fall, resulting in injury.
- Avoid installing in places near the seashore or poorly ventilated indoor pools. Bracket corrosion in such environments may cause the speaker to fall, resulting in injury.

When the Unit is in Use

If you notice any of the following irregularities during use, immediately disconnect the device from the power supply and contact your nearest TOA dealer. Do not attempt to operate the unit further, as this may cause fire or electric shock in any of these cases:

- smoke or a strange smell coming from the unit,
- Water or any metallic object has entered the unit,
- the unit has fallen, or the unit case is broken,

- the power cable is damaged (exposed core, disconnection, etc.),
- the unit suddenly stops producing sound,

Never open or remove the case of the unit to prevent fire or electric shock, as there are high-voltage components inside. Refer all servicing to qualified service personnel. Do not place cups, bowls, containers with liquid, or metallic objects on top of the unit. If spilled into the unit, these items may cause fire or electric shock.

Do not touch the unit or any connected cables during thunder or lightning storms, as this may result in electric shock.

CAUTION

Indicates a potentially hazardous situation which, if mishandled, could result in moderate or minor personal injury, and/or property damage.

⚠ CAUTION	Indicates a potentially hazardous situation which, if mishandled, could result in death or serious personal injury.

When Installing the Unit

- Never plug in or unplug the power supply plug with wet hands, as this may cause electric shock.
- When unplugging the power supply cord, grasp the plug itself; never pull on the cord. Operating the unit with a damaged power supply cord may cause fire or electric shock.
- When moving the unit, always disconnect the power cord from the wall outlet first. Moving the unit while the power cord is connected may damage the cord, resulting in fire or electric shock.
- Avoid installing the unit in humid or dusty locations, areas exposed to direct sunlight, near heaters, or in environments with sooty smoke or steam, as this may cause fire or electric shock.

When the Unit is in Use

- Do not place heavy objects on the unit, as this may cause it to fall or break, potentially resulting in personal injury and/or property damage. Additionally, the heavy object itself may fall off and cause injury or damage.
- Ensure the volume control is set to the minimum position before turning on the power. Loud noise at high volume when powering on can impair hearing.
- Do not operate the unit for extended periods with distorted sound, as this may cause the connected speakers to overheat, potentially resulting in fire.
- If dust accumulates on the power supply plug or in the wall AC outlet, a fire hazard may result. Clean these areas periodically and ensure the plug is fully inserted into the outlet.
- For safety, switch off the power and unplug the power supply from the AC outlet when cleaning or when the unit will remain unused for 10 days or more. Failure to do so may cause fire or electric shock.
- The lightning flash with arrowhead symbol within an equilateral triangle indicates the presence of uninsulated "dangerous voltage" inside the product enclosure, which may pose a risk of electric shock.
- Do not stand, sit, or hang on the unit, as this may cause it to fall or drop, resulting in personal injury and/or property damage.
- Let the unit inspect periodically by the retailer from whom it was purchased. Failure to do so may lead to corrosion or damage to the speaker or mounting bracket, potentially causing the unit to fall and cause injury.

2. GENERAL DESCRIPTION

2.1. Overview

SR-D200 is an active line array speaker. It is equipped with eight 10 cm(4-inch) high-quality full-range drivers and housing made entirely of aluminum. It is also equipped with mounting brackets for installation on a wall.

2.2. Features

- Eight 10 cm (4-inch) full-range frequency drivers
- Equipped with wall-mounting brackets
- Rated power: 200 W
- 32-bit DSP processing with a 48 kHz sampling rate and 24-bit AD/DA conversion
- 2 x 8-core matrix, 2 switchable analog channels (line balanced input and high voltage signal input), 2 Dante ports, 8 analog outputs connected to power amplifiers for the loudspeakers
- Input features including noise gate, gain, mute, phase, compressor/limiter, and linkage adjustment
- Output features including crossover (X-over), 6-band parametric EQ, gain, mute, phase, delay, and linkage adjustment
- All PEQ parameters (gain, bandwidth, frequency) are continuously adjustable. Filter types selectable: peak, high shelf, low shelf, low cut, high cut, all-pass 1, all-pass 2
- High-cut and low-cut filter types selectable among Butterworth, Linkwitz-Riley, and Bessel, with slope options from –6 dB/oct to –24 dB/oct
- Noise gate threshold and timing adjustable on inputs; compressor and limiter ratio, timing, and knee point adjustable on outputs
- Maximum delay time: 625 milliseconds for all output channels
- Equipped with dual Dante network ports, enabling discovery of all device IDs on the same network segment via PC software, supporting simple one-button connection for easy user operation
- 30 user presets available

*Dante® is a registered trademark of Audinate Pty Ltd.

2.3. Interface Description

Unit connections:

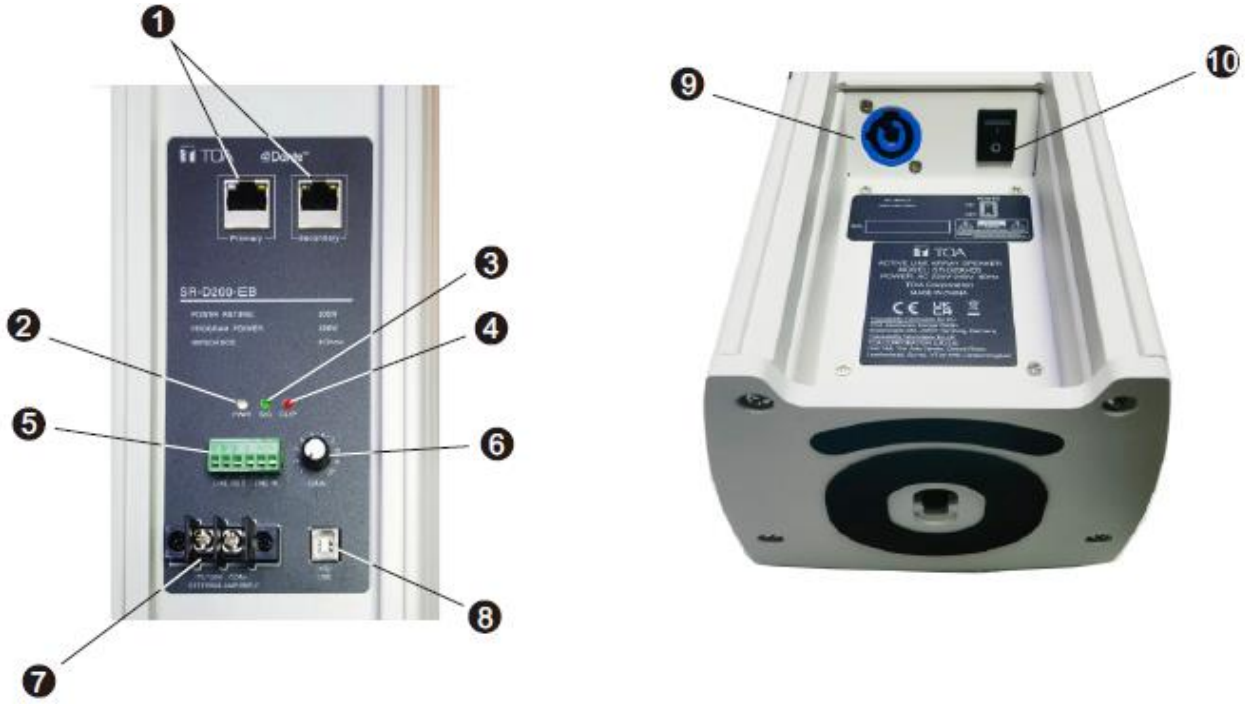

① Network Interface: For software configuration and Dante audio connection.
② Power Indicator LED: Lights green when the unit is powered on.
③ Signal Indicator LED: Lights green when the input signal exceeds -30 dBu.
④ Peak Indicator LED: Lights red when the input signal exceeds +2 dBu.
⑤ Signal Input/Output: Analog signal input and output connections.
⑥ Volume Control: Adjusts the level of the input signal.
⑦ External Amplifier Input: Input for 100 V speaker line signal.
⑧ USB Port: For connection to configuration software.
⑨ Power Input: AC power supply input.
⑩ Power Switch: ON/OFF switch for the unit's power.

*Dante® is a registered trademark of Audinate Pty Ltd.

2.4. Accessories

2.4.1. Serial number 26H and earlier

Item	Quantity
Bracket A	3
Bracket B	3
M6 Lock Washer	12
M6 Flat Washer	12
M4 × 12 Screw	12
M5 × 60 Screw	12
M6 × 12 Screw	12
Power Cable	1

2.4.2. Serial number 26I and later

Item	Quantity
Bracket	2
Optional safety bracket	1
M4 × 12 Screw	10
Wall-mounting template	1
Power Cable	1

2.5. PC Requirements

Requirements to use SR-D200-EB Digital Speaker Editor V1.0

Display	Minimum Display size: 1280 × 800
PC Requirements	Windows 10 or newer

3. INSTALLATION:

3.1. Installation procedure

Two mounting types are compatible for this line array speaker:

- Type 1*:* provided with devices with serial numbers 26I and earlier.
- Type 2*:* provided with devices with serial numbers 26J and later.

Select the appropriate installation instructions based on the mounting type included in the packaging.

The brackets do not support tilt or angle adjustment.

3.1.1. Type 1*.*

Use all three mounting components. Only vertical (straight-ahead) wall installation is allowed.

1. Install bracket A on the solid flat wall with four M5×60 screws.

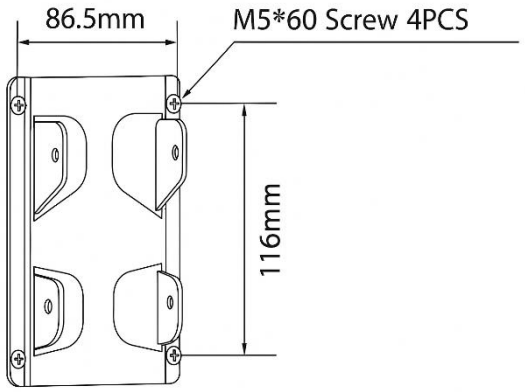

2. Remove the four original M4×12 screws from the speaker. Mount bracket B onto the rear side of the column speaker using four M4×12 screws.

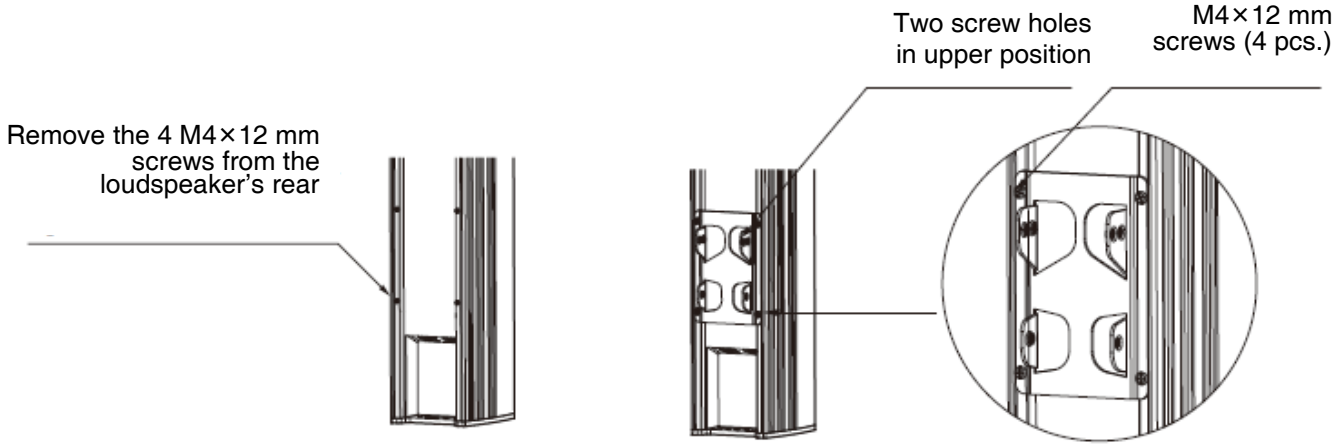

3. Attach the column speaker with bracket B to bracket A fixed to the wall, using four M6×12 screws along with flat and lock washers.

   Make sure all screws and washers are tightened securely. Double check that all fasteners are used and connections are firm for safety.

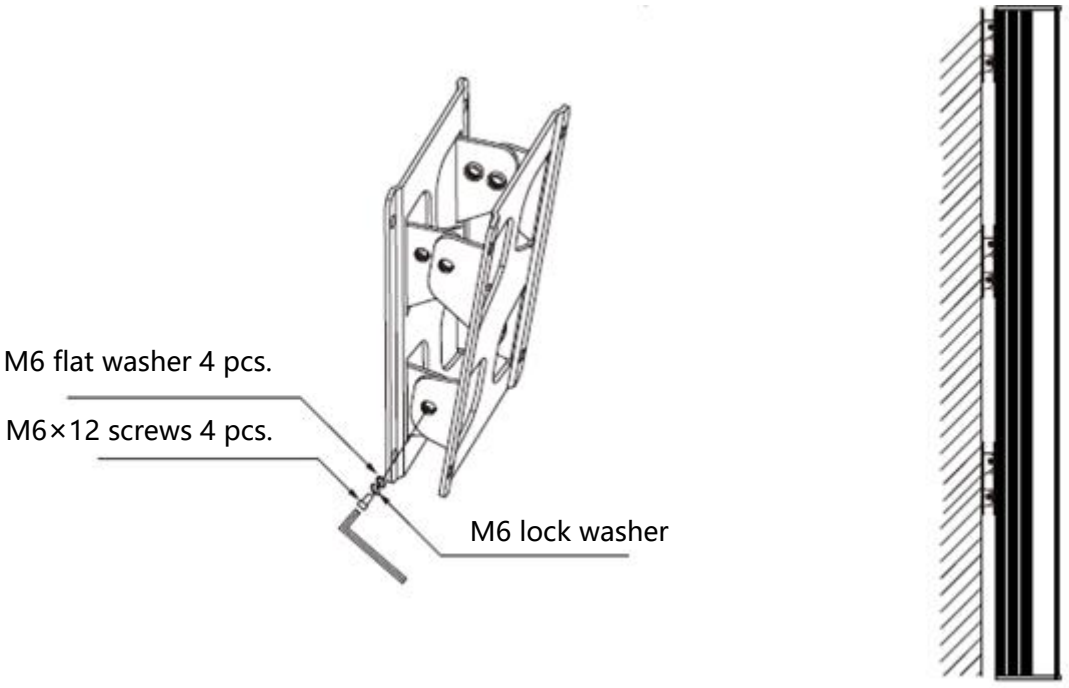

3.1.2. Type 2.

The bracket in position **A** must be installed together with a bracket in either position **B** or position **C**. It is recommended to install the brackets in positions **A** and **C**.

1. Use the supplied M4×12 screws to attach the brackets to the product, using four screws per bracket.

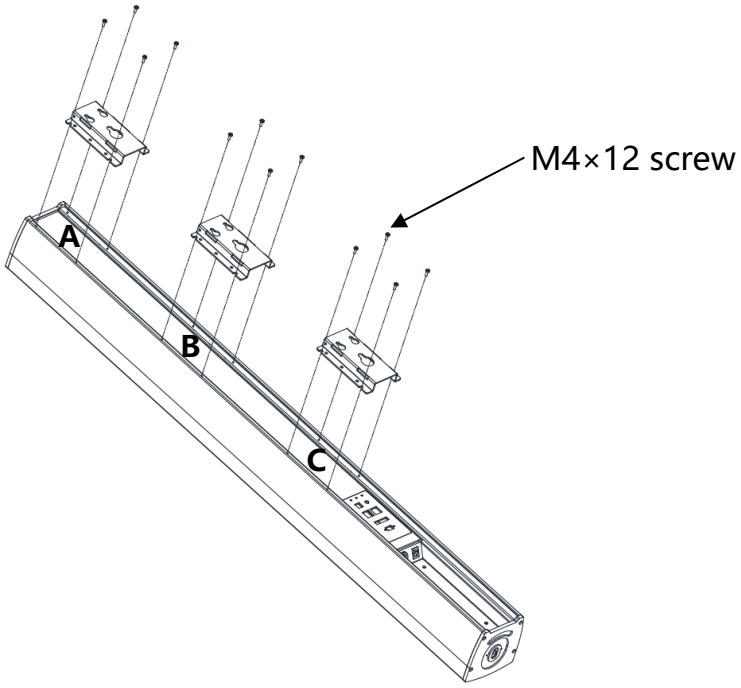

2. If the optional safety bracket needs to be installed on the top of the speaker, attach it to the bracket at the position **A** using two M4×12 screws.

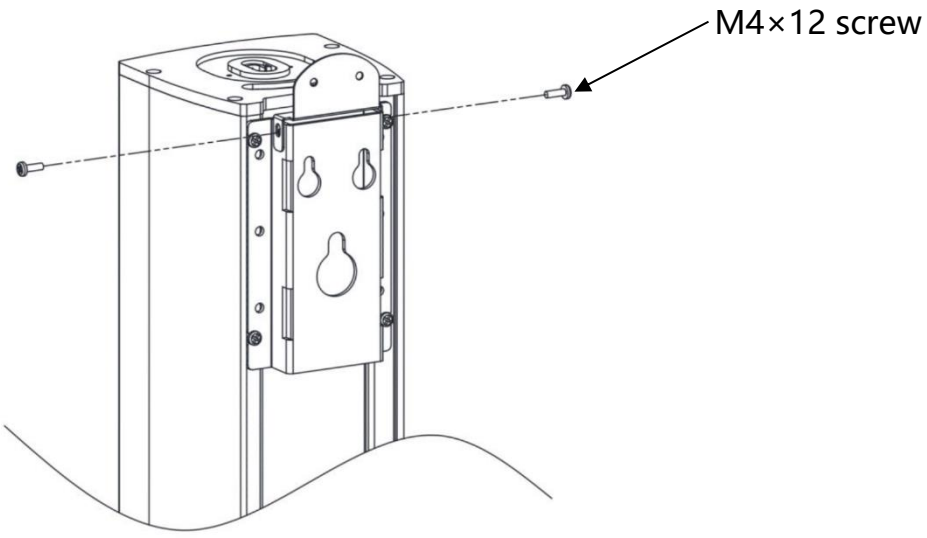

3. Attach the mounting template to the wall. Select either M6 or M10 mounting bolts and drill the holes as indicated in the drawing at positions A and B or A and C, depending on the selected configuration. Secure the mounting bolts to the wall, ensuring that the bolt heads protrude at least 3 mm from the wall surface.

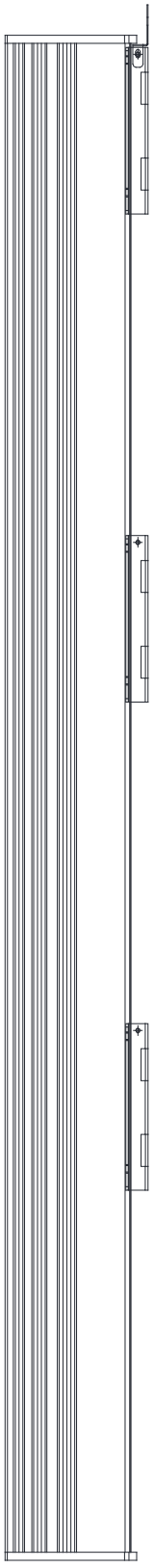

MOUNTING PATTERN

It is recommended to install the brackets in positions A and C.
To meet the load requirements, the bracket in position A must be installed together with a bracket in either position B or position C.
Please attach the template to the mounting surface. Select either M6 or M10 mounting bolts, as required, and drill the holes as indicated in the drawing.
The uppermost M4 screw hole is intended for the installation of an optional safety bracket to prevent unauthorized removal of the line array speaker.

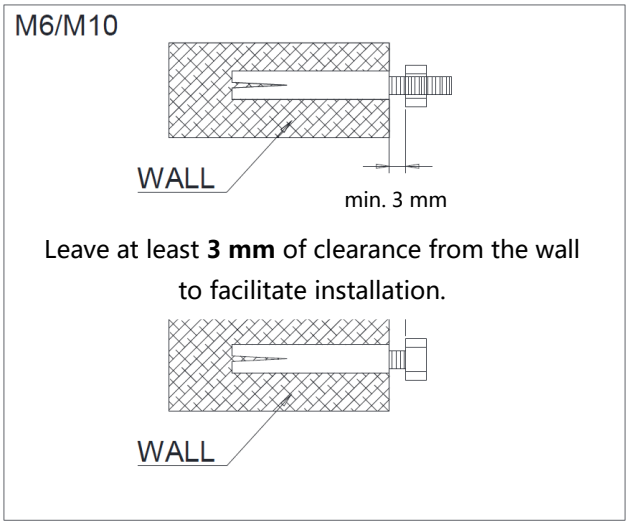

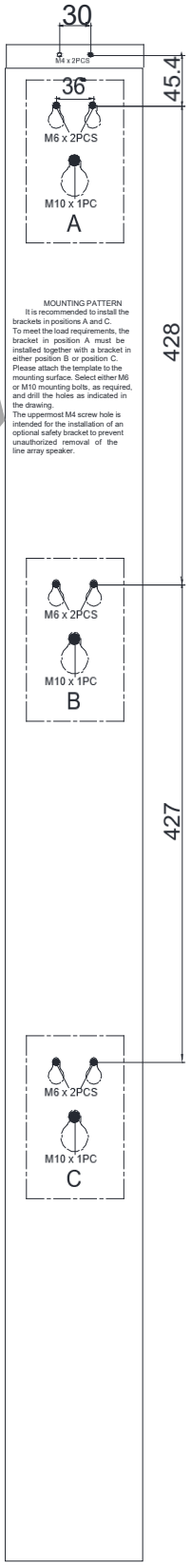

4. Remove the mounting template, then hang the speaker on the installed bolt heads.

5. If using the optional safety bracket attached to the bracket A, secure it to the wall with two M4 screws. The length of the screw must not be less than 25 mm.

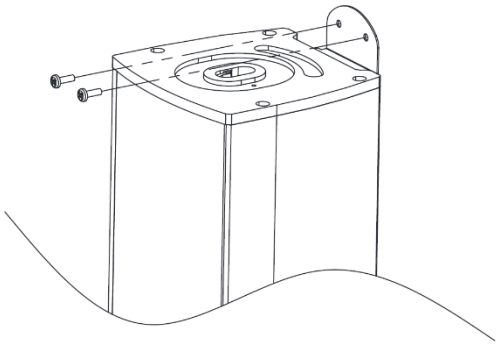

3.2. Connection for Setting Software

The setting software can be downloaded free of charge from the official TOA website in the *Downloads* section of the SR-D200-EB product page. To use the Software Editor, connect your Active Line Array Speaker to your PC. This can be done by using a network cable plugged into the Dante port and the PC, or by using included USB cable.

Note: Move the file "SR-D200-EB Digital Speaker Editor V1.0" to your desktop to use the Software Editor.

Connection via Network Interface

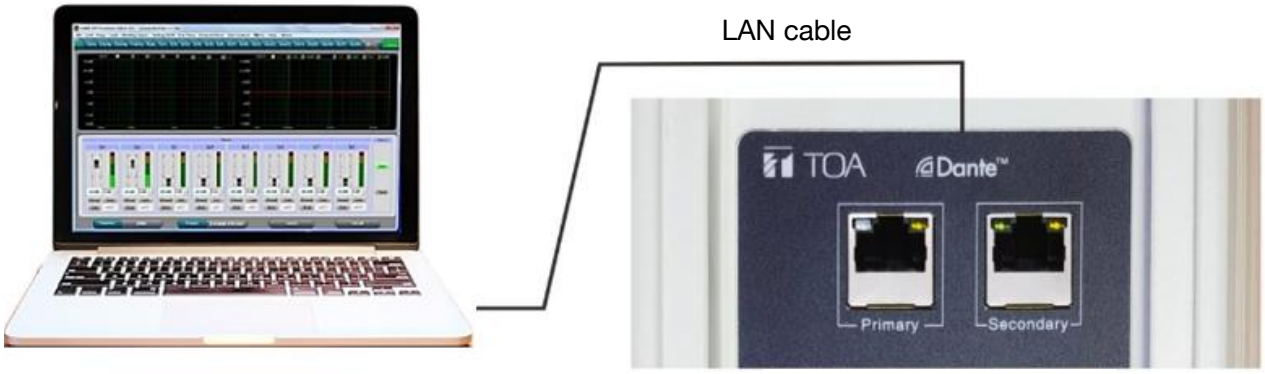

Loudspeaker's interface

1. Move the application "SR-D200-EB Digital Speaker Editor V1.0" to your Desktop and open it.



2. Connect your Active Line Array Speaker to the PC using a network cable to one of the ports. When the power on the device is on, open the Dante Control Software to check the IP address of the device. (Note: the computer IP should be set to “obtain automatically”.)
3. Open the PC control software, select the IP address menu, input the checked IP address, then click the top right link button. After this, the online button changes into green at the top right corner and shows “Online”, then the software and device are connected successfully. You can operate the processor by the control software, click the “Online” button before exit, then close the control window. (IP address setting for the device is done by Dante Control Software.)

*Dante® is a registered trademark of Audinate Pty Ltd.

Connection via USB:

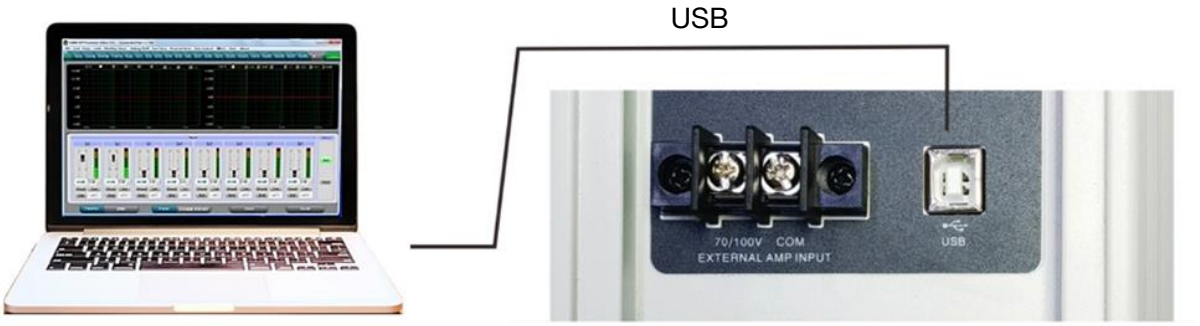

Loudspeaker’s interface

4. When connected to a PC via USB cable, the device can be debugged through PC software.

<u>Note: Please move the application “SR-D200-EB Digital Speaker Editor V1.0” to your desktop before you open it.</u>

3.3. Setting Software Description

The setting software can be downloaded from the official TOA website, in the Downloads section of the SR-D200-EB product page.

3.3.1. Volume Control Interface

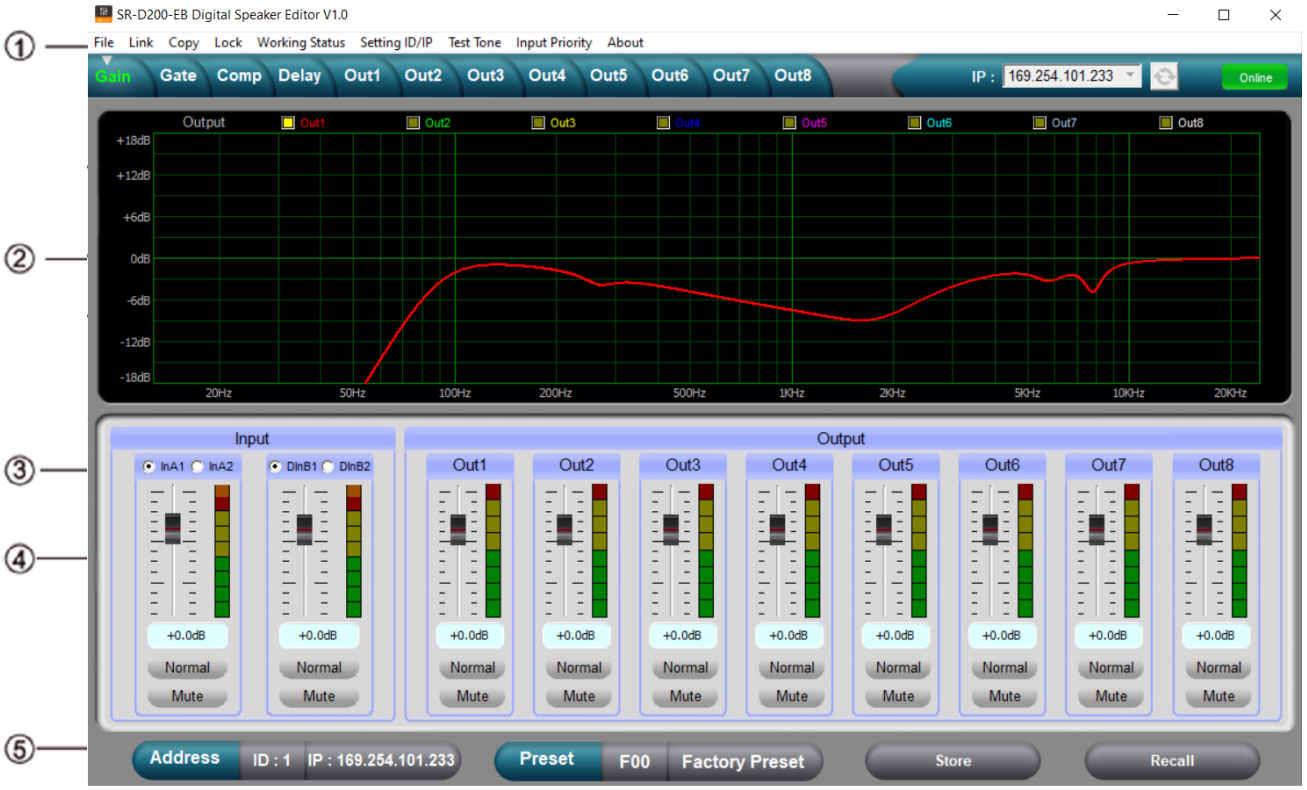

① Menu

File — Open and save preset parameter, all data can be downloaded to the computer and sent to the device.

Link	Input and output channels can be set freely to adjust all parameters.
Copy	Parameter can be copied freely between the input and output channels.
Lock	Setting password of the panel to ensure the safety of the device.
Working status	The working status can be set as; not memory; immediate memory (under U01-21 user mode), no memory but can be back to u01 mode when power is on.
Setting ID/IP	To cascade and control more than 254 devices, unique IDs and IP addresses can be assigned for long-distance and wireless Wi-Fi control.
Test tone	Built-in signal generator for pink noise, white noise and sine waves.
Input Priority	Input Priority: “Dante > Analog” (Dante has a higher priority) / “Analog > Dante” (Analog has a higher priority) / “Analog = Dante” (Both have the same priority)

② Spectrum Area:

Allows selection of PEQ and phase settings, displaying both input and output channels.

③ Input channel selection:

Analog and Dante channels are selectable, allowing channel resources to be shared. Dante input and output signals can also be processed via the analog channels.

The mapping between each input channel name and the corresponding interface is as follows:

InA1:	Analog signal input	DinB1:	Dante primary input
InA2:	External amplifier input	DinB2:	Dante secondary input

④ Volume control area:

Gain, Phase, Mute control for all input & output channels.

⑤ Preset operation area:

Enables saving or recalling preset parameters and displays current preset.

*Dante® is a registered trademark of Audinate Pty Ltd.

3.3.2. Noise Gate Interface

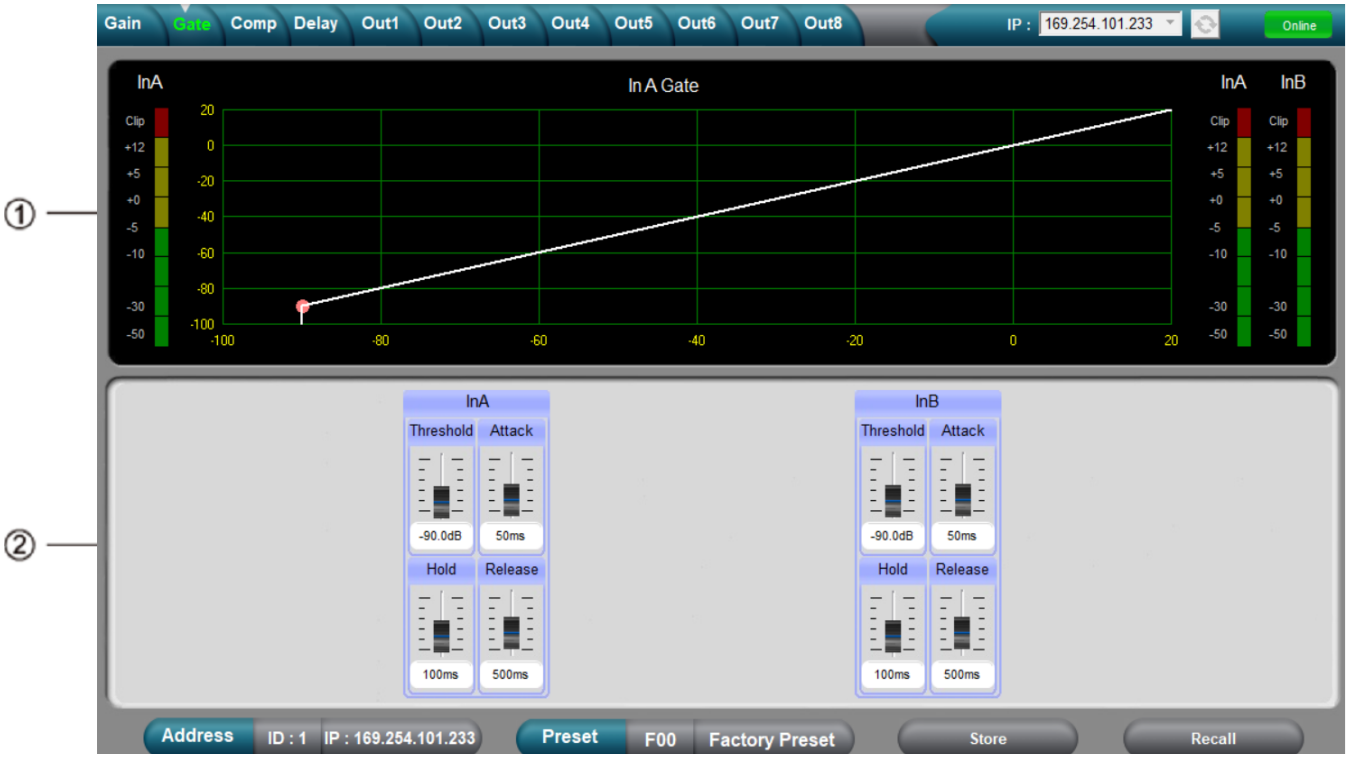

① Shows threshold curve, level indicators for all channels.

② Allows setting noise gate parameters for all input channels: the threshold is -90 dB～0 dB, attack time is: 1～999 ms, release time is 1～3000 ms, hold time is 10～999 ms continuously adjustable.

3.3.3. Compressor Interface

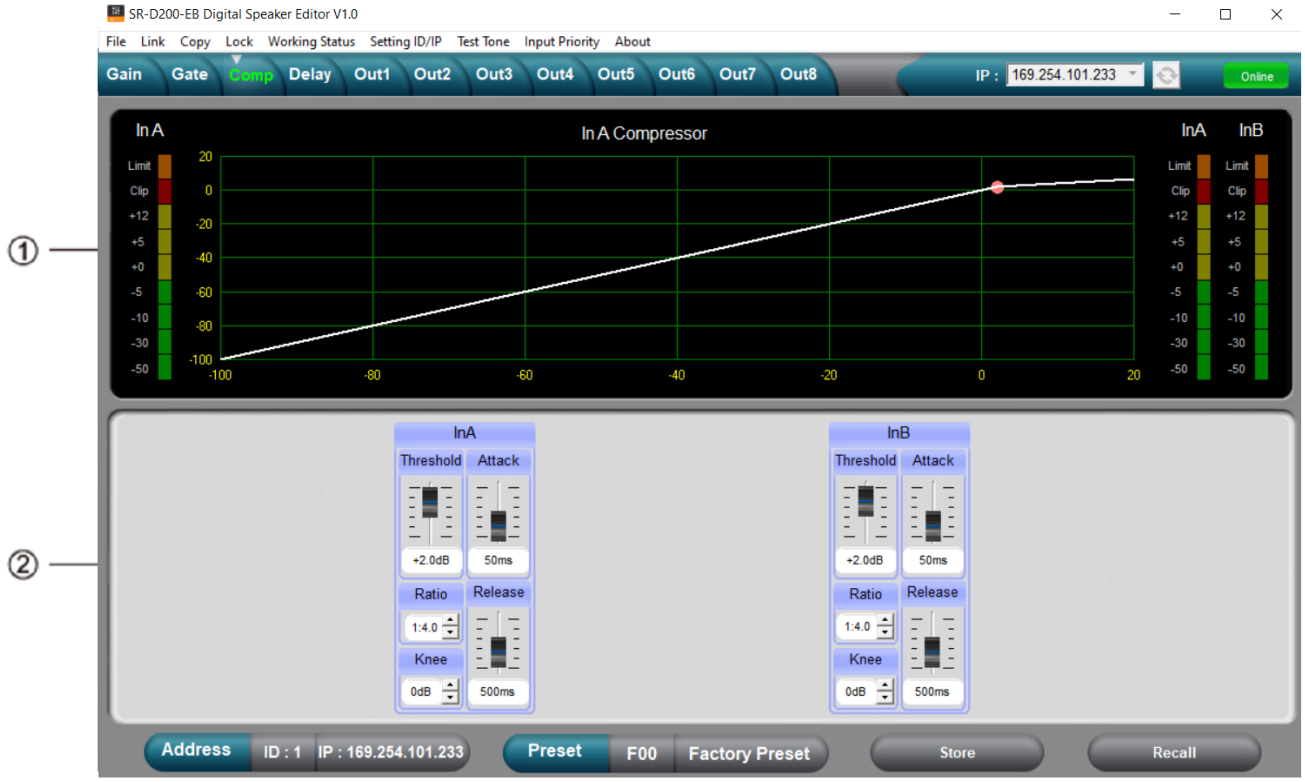

① Shows compression status level indicators and compression status of all channels.

② Sets the whole compression parameters for output channels, the compression range is -60 dB ～+20 dB, ratio is 1:1, 1:10, limit, attack time is: 0～999 ms, release time is 10～3000 ms, knee is 0～12 dB.

3.3.4. Delay Interface

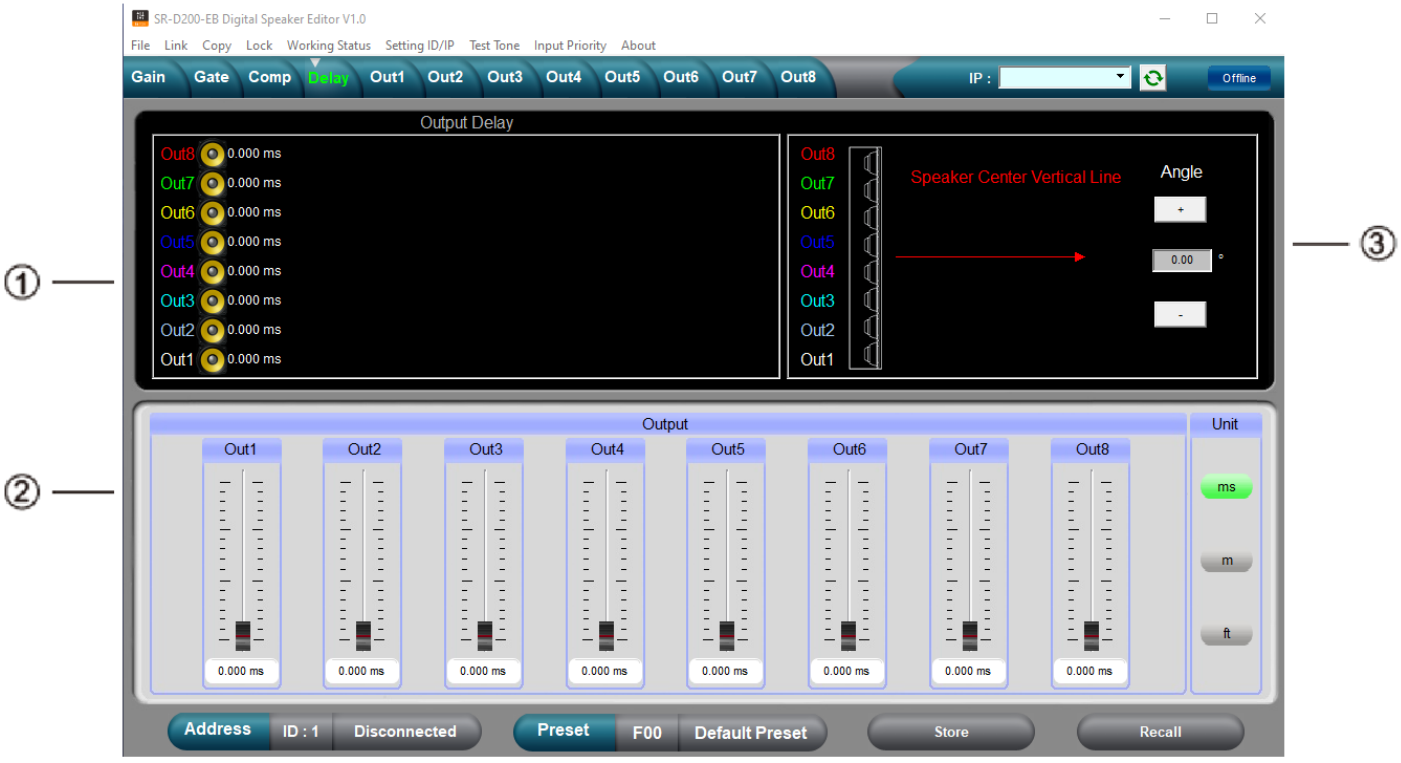

① Shows the delays for all channels

② Adjusts the delay parameters for all channels within a range of 0 to 625 ms, with units selectable from milliseconds, meters, and feet.

③ Adjusts the Speaker Center Vertical Line from -15° to +15° in 3.75° increments.

Example:

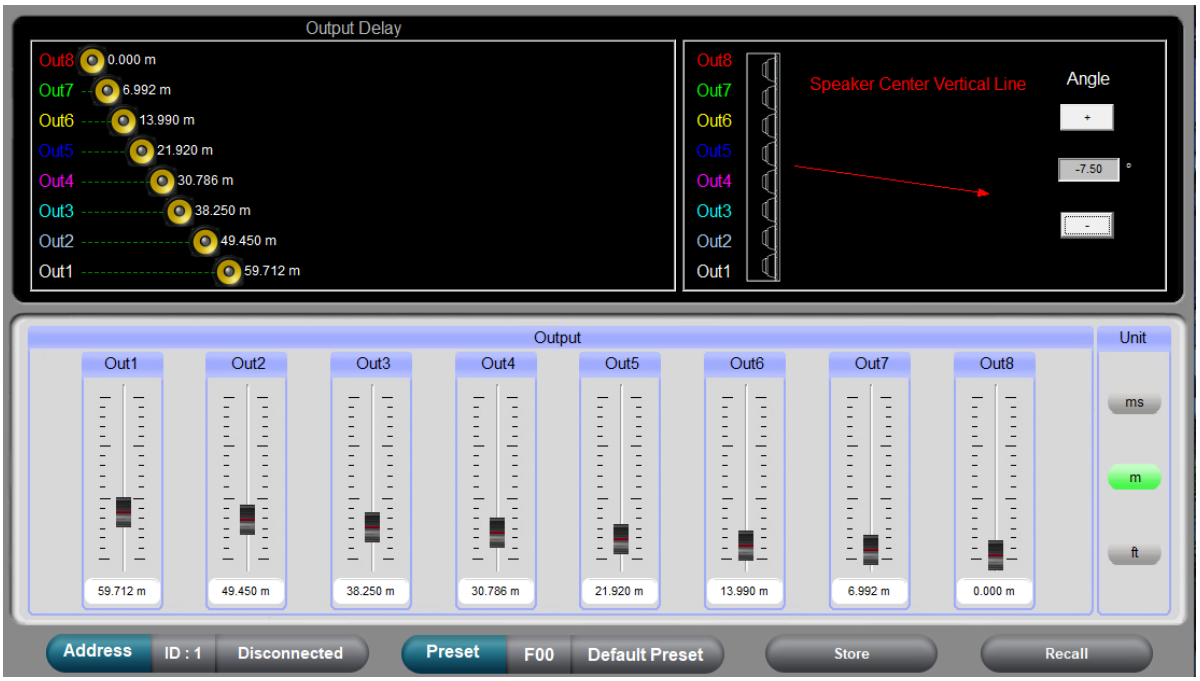

3.3.5. Output Interface

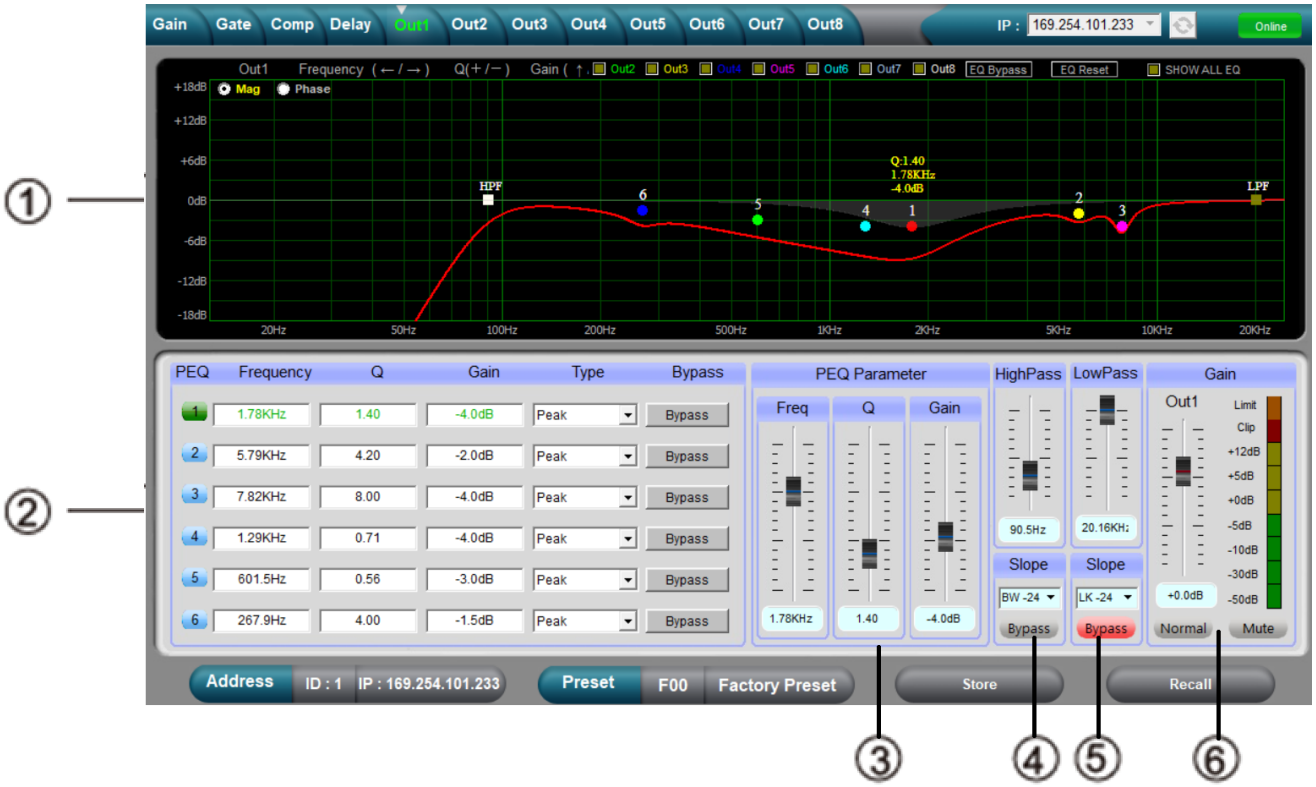

① Use the interface to adjust the parametric equalizer (PEQ), as well as the High-Cut and Low-Cut filters, for each output channel.
If you switch from Magnitude ("Mag") to the "Phase" interface, you can change the phase of the current channel and display the equalizer and phase curves of other channels at the same time, making it easier to compare and synchronize your settings.

② Adjustable parameters include gain, mute, Q factor, frequency, and type for all PEQ bands. A bypass function is available as an option. PEQ styles include balanced, high-shelf, low-shelf, high-cut, low-cut, phase 180°, phase 360°, band pass, and band elimination.

③ PEQ gain, Q, and frequency can be adjusted with the fader or using the keyboard arrow keys.

④ The low-cut frequency can be adjusted from 20 Hz to 20 kHz. Available slope types are Butterworth, Bessel, and Linkwitz-Riley, with slopes ranging from –6 dB/oct to –24 dB/oct.

⑤ The high-cut frequency can be adjusted from 20 Hz to 20 kHz. Available slope types are Butterworth and Bessel, with slopes ranging from –6 dB/oct to –24 dB/oct.

⑥ Gain, mute, phase, level display, and indicator lights for the output channels can all be controlled independently.

4. Reference dimensions

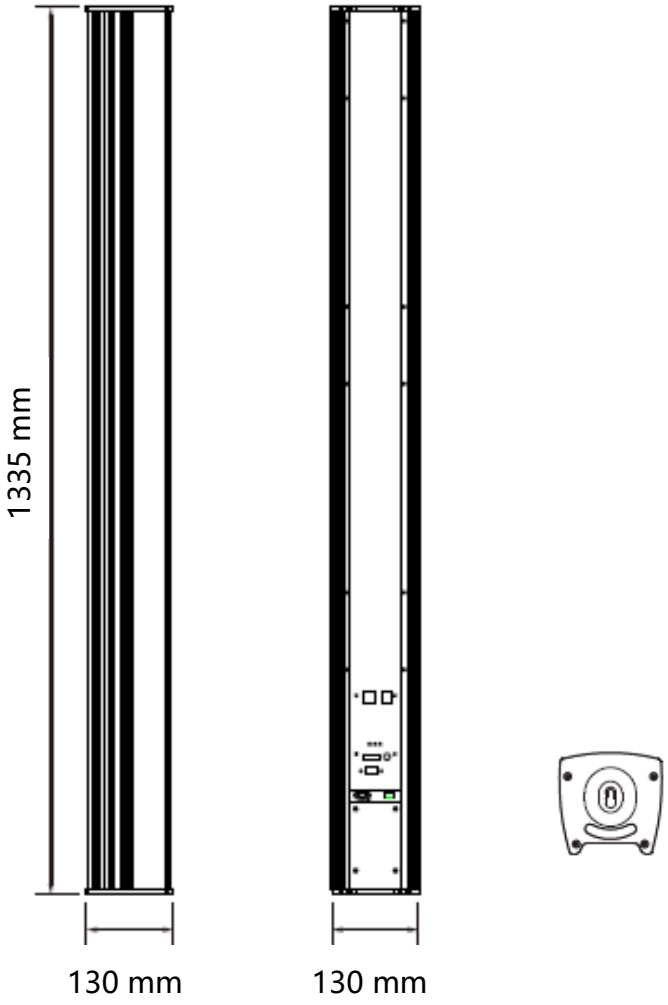

5. APPENDIX

5.1. Specifications

SR-D200-EB Active Line Array Speaker

Power supply	220 V ～ 240 V AC 50/60 Hz
Power consumption	107 W or less (rated output), 320 W or less (maximum output)
Frequency response	100 Hz – 20 kHz (-10 dB)
Sampling frequency	48 kHz
Sampling quantization	A/D converter 24-bit, D/A converter 24-bit, DSP processing 32-bit
Dynamic range	94 dB or more
Distortion (THD)	0.05 % or less at 1 kHz (measured with -10 dBu 20 Hz – 20 kHz BPF)
Amplifier	Class D, 8 channels
Rated amplifier output	200 W, 25 W per channel (1% THD+N)
Speaker components	10 cm cone type x8
Maximum SPL	123 dB SPL (at 1m)
Horizontal dispersion	135°
Vertical beam-steering angle	-15° to +15° (adjustable by using the SR-D200-EB setting software)
Network I/F	2 x RJ-45, primary and secondary Dante Port, for Dante and device setup
USB I/F	1 x Type-B, for the device setup
External amplifier input	Analog Input 100 V, Analog Output 200 W RMS
Analog audio input / output	Input: 1 channel, balanced, Removable Terminal-block, (3 pins), maximum input level: +4 dBu, 10 kΩ Output: 1 channel, balanced, removable terminal-block (3 pins), direct connection from the input
Control	Volume for Speaker line input (-∞ to 0 dB)
LED	Power LED: yellow (when CPU is running) Signal LED: green (signal level = -30 dBu or higher) Peak LED: red (signal level = +2 dBu or higher)
Operating temperature	-10°C to 55°C
Operating humidity	90 % RH or lower (no condensation)
Finish	Enclosure: aluminum, paint white (RAL9016), Front grille: steel, paint white (RAL9016)
Dimensions	130 (W) x 1,335 (H) x 130 (D) mm
Weight	12 kg
Accessories	(Serial number 26H and earlier) Power Supply Cord (1.8 m) …1, Removable terminal plug …1, Bracket A … 3, Bracket B … 3, Mounting screw M4x12 …12, M5x60 …12, M6x12 …12, Lock washer M6 …12, Flat washer M6 …12 Safety Information …1 (Serial number 26I and later) Power Supply Cord (1.8 m) …1, Removable terminal plug …1, Bracket … 2, Optional safety bracket … 1，Mounting screw M4x12 …10, Wall-mounting template … 2，Safety Information …1

*Dante® is a registered trademark of Audinate Pty Ltd.

Traceability Information for Europe

Authorized representative:
TOA Electronics Europe GmbH
Suederstrasse 282, 20537 Hamburg, Germany

URL EU : https://www.toa.eu
URL Global : https://www.toa-global.com/en

20260907