TOA

LONG RANGE ARRAY SPEAKER 240W HA-2240EN

The HA-2240EN is certified to the European Standard EN 54-24: 2008, Loudspeaker for voice alarm systems for fire detection and fire alarm systems In compliance with the British Standard BS 5839-8: 2008.
DoP number is 23-104.

■DESCRIPTION

The HA-2240EN is composed of multiple horn speakers positioned in an array. It is a highly efficient speaker. Clear voice can be transmitted to a distant place without acoustic correction. The built-in high-pass filter cuts the bass that can damage the speaker. Drip-proof structure, and a salt-resistant paint finish, it has excellent durability in an outdoor permanent environment.

■SPECIFICATIONS

Rated Input	240 W
Rated Impedance	100 V line: 42 Ω (240 W), 83 Ω (120 W) 70 V line: 21 Ω (240 W), 42 Ω (120 W)
Sensitivity	115 dB (1 W, 1 m) (500 Hz – 5 kHz, IEC60268-5)
Max. SPL	138 dB (240 W, 1 m) (500 Hz – 5 kHz, IEC60268-5)
Frequency Response	490 Hz – 4.2 kHz (–10 dB) 280 Hz – 8 kHz (–20 dB)
Speakers Component	Horn speaker unit × 6
Operating Temperature	–20 °C to +55 °C (–4 °F to 131 °F)
Dust/Water Protection	IP66
EN 54-24	
Sensitivity	91 dB (1 W, 4 m)
Max. SPL	114 dB (240 W, 4 m)
Coverage Angle (–6 dB)	Horizontal: 200° (500 Hz), 120° (1 kHz), 65° (2 kHz), 40° (4 kHz) Vertical: 40° (500 Hz), 20° (1 kHz), 15° (2 kHz), 15° (4 kHz)
Environmental Type	B (outdoor applications)
Dust/Water Protection	IP33C
Speaker Cable	4-core cabtyre cord 2 m (6.56 ft)
Cable Gland	Size: PG 13.5 – 12 (gray) ···1 Cable Diameter Range: 12.5 – 6.5 mm (0.49" – 0.26") Size: PG 13.5 – 08 (black) ···1 Cable Diameter Range: 9 – 4.5 mm (0.35" – 0.18") Two cable glands are factory-installed.
Input Terminal	Ceramic terminal (3-pole), can be bridge-connected ···1 Ceramic terminal (2-pole) ···1 Thermal fuse is included.
Applicable Wire Size	For Ceramic terminal (3-pole) Conductor: Solid wire or 7-core wire No bridge connection: 0.8 – 10 mm² (AWG 18 – 7) for solid wire, 0.8 – 8 mm² (AWG 18 – 8) for 7-core wire Bridge connection: 0.8 – 2.5 mm² (AWG 18 – 13) for solid wire, 0.8 – 1.5 mm² (AWG 18 – 15) for 7-core wire
Finish	Case: FRP, white (RAL 9016 equivalent), paint Front grille: Aluminum, white (RAL 9016 equivalent), paint Bolts: Stainless steel (SUS304)
Dimensions	215 (W) × 1110 (H) × 309 (D) mm (8.46" × 43.7" × 12.17") (excluding projection)
Weight	33 kg (72.75 lb)
Accessory	Terminal box ···1
Option	Speaker mounting bracket: YS-1100A

Notes: The speaker must be installed upright or facing down. Installing the speaker in any other position may render the drainage hole ineffective, eventually leading to an electrical failure or other damage.

TOA

LONG RANGE ARRAY SPEAKER 240W HA-2240EN

APPEARANCE

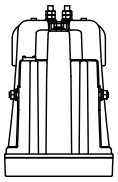

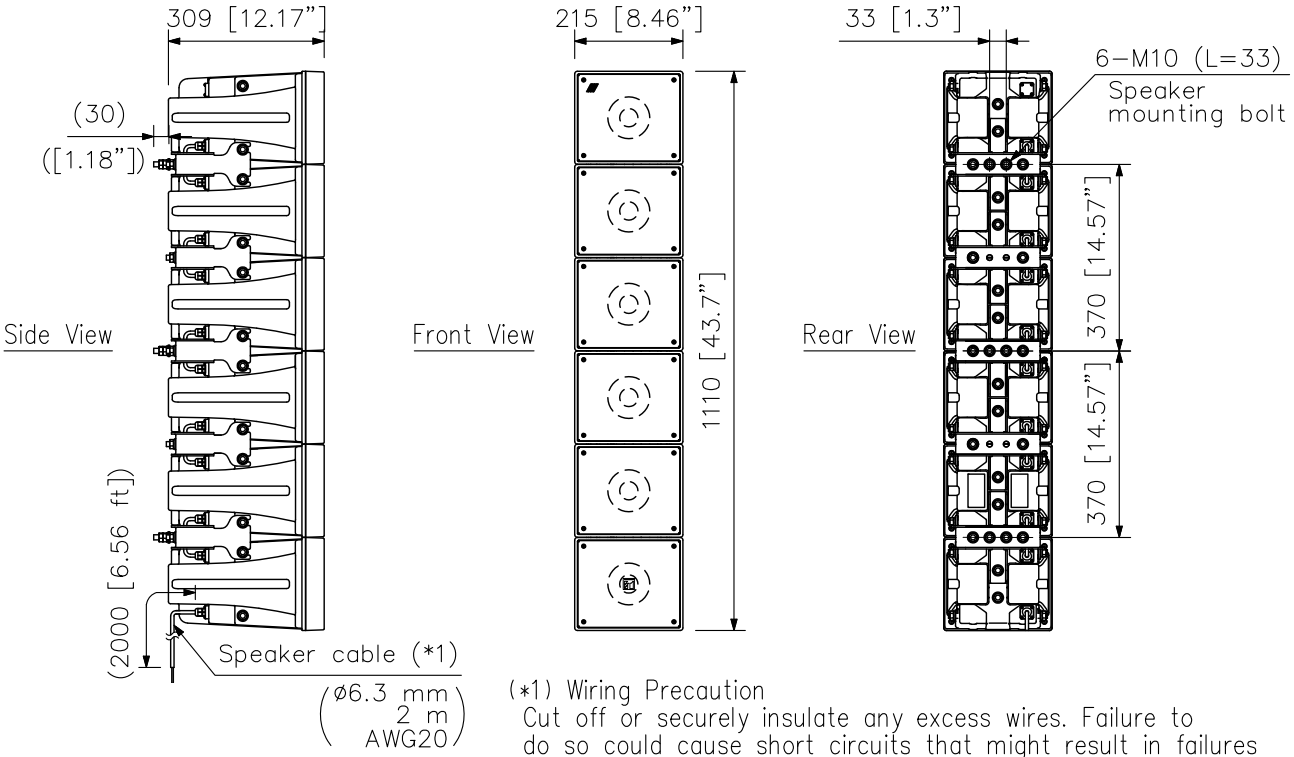

(*1) Wiring Precaution
Cut off or securely insulate any excess wires. Failure to do so could cause short circuits that might result in failures of the speaker or connected amplifier.

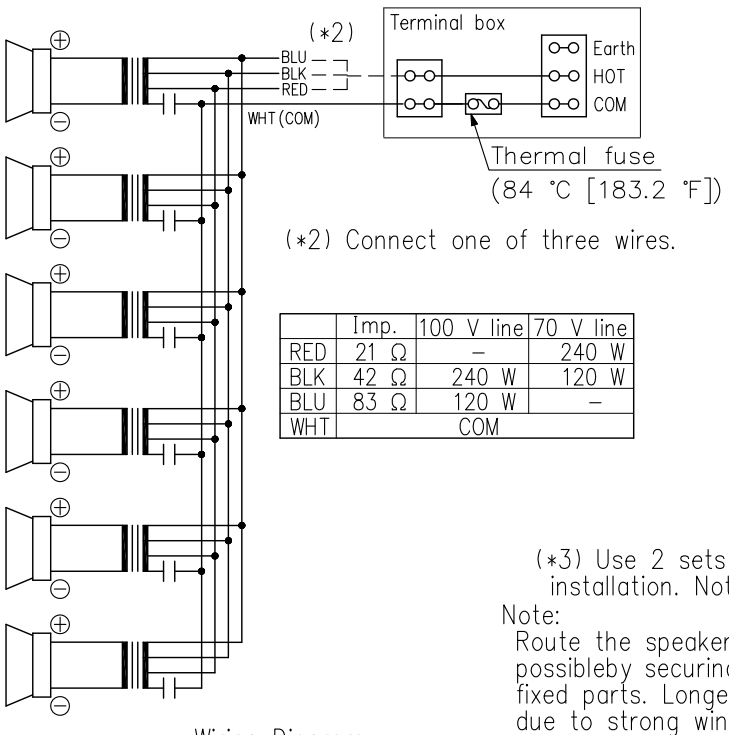

(*2) Connect one of three wires.

	Imp.	100 V line	70 V line
RED	21 Ω	–	240 W
BLK	42 Ω	240 W	120 W
BLU	83 Ω	120 W	–
WHT	COM		

Wiring Diagram

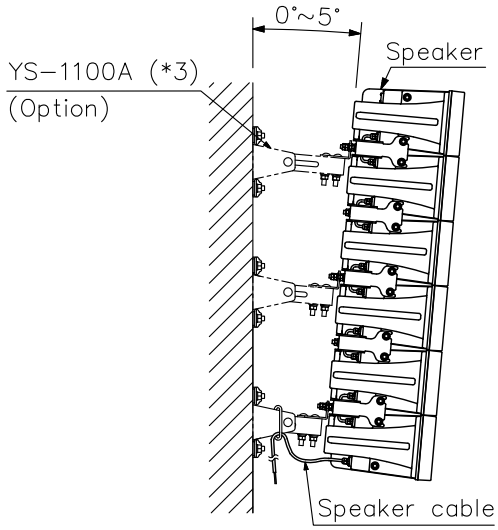

(*3) Use 2 sets of YS-1100A brackets (2 pieces per set) for installation. Note that one of these brackets will not be used.

Note:
Route the speaker cables in as short a configuration as possibleby securing them to nearby brackets or other firmly fixed parts. Longer wiring distances may result in cable breakage due to strong winds or other potentially harmful conditions.

Speaker mounting example

UNIT: mm SCALE: 1/15

Note: Numerical values in parentheses are for reference only.